INSULATED ICE BUCKET
IB200

Branding

Permanent laser branding dimension.

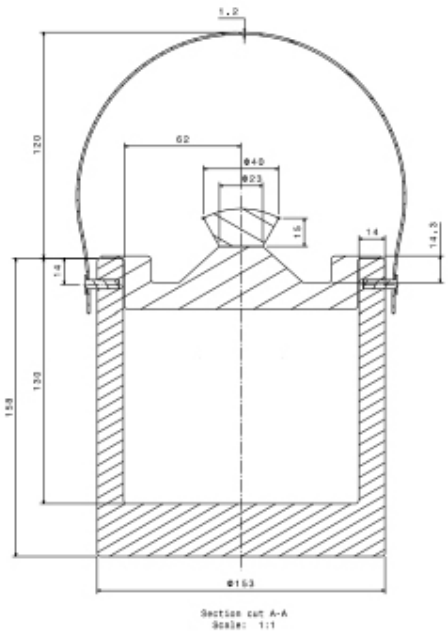

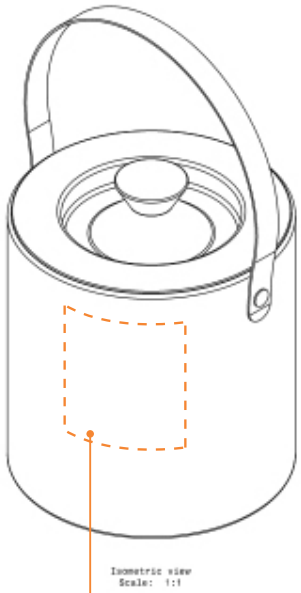

Logo Area

45mm x 120mm.

	IB200
Size ml	1890
Dimensions mm (Dia x H)	153 x 158
Weight g (Empty)	710
Finish	Satin Stainless Steel

Branded Tumblers & Barware
design@brym-uk.com
01726 256890

Long-Life Durability

Manufactured from food grade stainless steel.

High Build Quality

Suitable for commercial or heavy domestic use.

High Capacity

1890 ml.

Friendly Wash

Dishwasher proof for endless wash cycles.

Personalise

Available in a fine range of metal or powder-coat finishes and laser branding.